TECHNICAL DATASHEET

FLANGED CHECK VALVES | TYPE FCV

FIRE HVAC

Size range: 2" - 12"

FM APPROVED

Profit check valves type FCV are swing-type valves that allow water flow in one direction. They have a fixed flange on the in- and outlet. The valves are designed to be used in fire protection sprinkler and HVAC systems.

Characteristics

- In- and outdoor use.
- Resilient seating with EPDM-rubber against a bronze ring.
- Gravity operated, swing check design.
- Flanged ends according to EN 1092-2/PN16 standard.
- Meets the AWWA C 508 standard.
- Installation in vertical flow (upwards) and horizontal pipes is allowed.
- Very low pressure losses, even at high flow rates.
- Anti-corrosion protection: high grade polyester powder coating, RAL 3000, meets or exceed AWWA C 550 standards.
- Equipped with a maintenance hatch (maintenance set available).

Working pressure

2,41 MPa / 24,1 bar / 350 psi.

Working temperature

0°C to +80°C.

Approvals

- FM approved to FM standard 1210.
- UL 1091 listed.

Material specifications

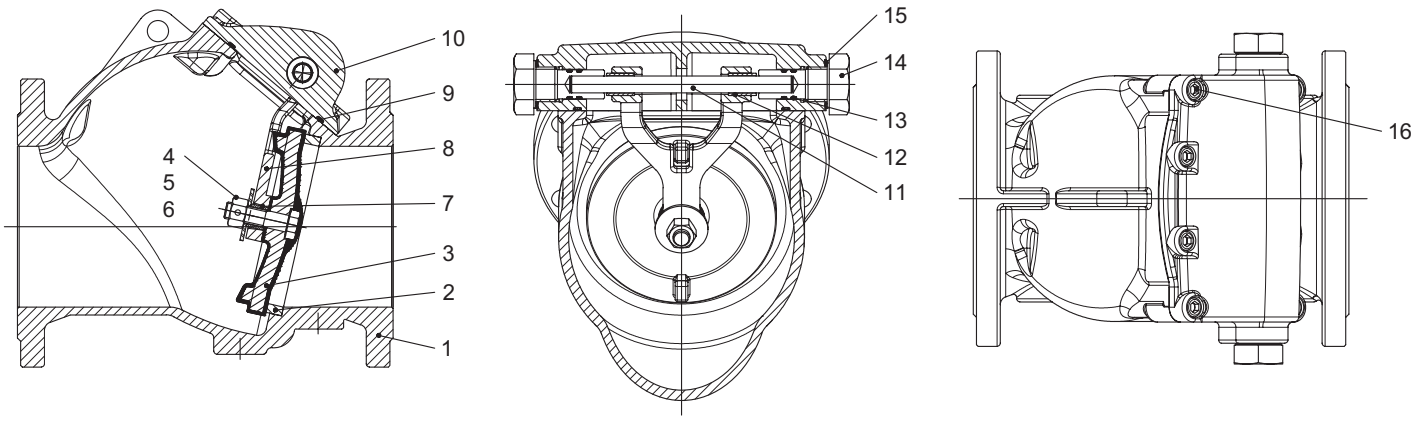

Part N°	Component	Material	European standard	ASTM standard
1	Body	Ductile cast iron	EN-GJS-450-10	A536 Grade 65-45-12
2	Body seat ring	Bronze	CuSn5Pb5Zn	B62 C83600
3	Disc, EPDM encapsulated	Ductile cast iron	EN-GJS-450-10	A536 Grade 65-45-12
4	Connection stem	Stainless steel	X5CrNi18-10	A 276 AISI 316
5	Nut (locking)	Stainless steel	X5CrNi18-10	A 276 AISI 304
6	Retainer washer	Stainless steel	X5CrNi18-10	A 276 AISI 304
7	Bushing	Stainless steel	X5CrNi18-10	A 276 AISI 304
8	Hinge 2" - 8"	Stainless steel	X5CrNi18-10	A 351 CF8
	Hinge 8"-12"	Ductile cast iron	EN-GJS-450-10	A536 Grade 65-45-12
9	Cover gasket	Rubber	-	D2000-EPDM
10	Bonnet	Ductile cast iron	EN-GJS-450-10	A536 Grade 65-45-12
11	Locating sleeve	Stainless steel	X5CrNi18-10	A 276 AISI 304
12	Hinge bushing	Bronze	-	B 148 C95200
13	O-ring	Rubber	EN-GJS-450-10	D2000-NBR
14	Hing pin plug	Stainless steel	X5CrNi18-10	A 276 AISI 304
15	Plug washer	Red copper	-	-
16	Cover bolt	Carbon steel	Grade 4.6	A307 Grade B

Dimensions

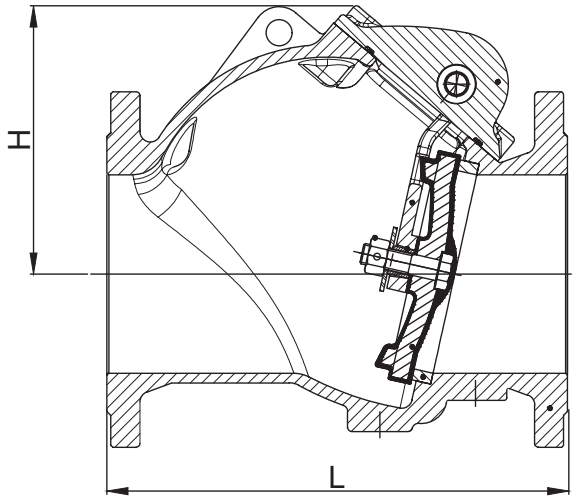

Dimensions (mm / inch)				
Reference	Size	L	H	Marking
FCV2*	2″	209 / 8.2	104 / 4.1	FCVL
FCV2½*	2,5″	226 / 8.9	112 / 4.4	FCVL
FCV3	3″	251 / 9.9	124 / 4.9	FCVL
FCV4	4″	292 / 11.5	157 / 6.2	FCVL
FCV5*	5″	330 / 12.0	195 / 7.7	FCVL
FCV6	6″	356 / 14.0	207 / 8.1	FCVL
FCV8	8″	495 / 19.5	264 / 10.4	FCVL
FCV10	10″	622 / 24.5	304 / 12.0	FCVL
FCV12	12″	699 / 27.5	355 / 14.0	FCVL

*No stock item.

Marking

Body:

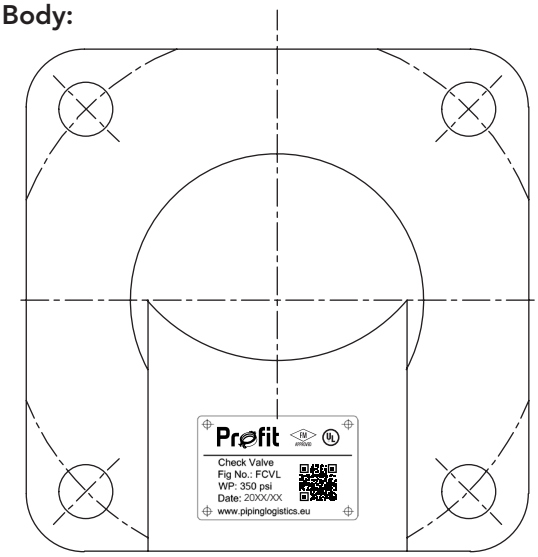

Marking-plate:

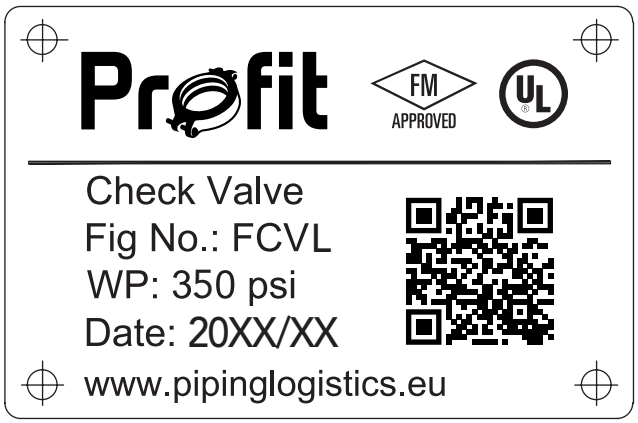

Certifications

Size		FM and UL
DN 50	2″	Up to 2,41 MPa / 24,1 bar / 350 psi
DN 65	2,5″	Up to 2,41 MPa / 24,1 bar / 350 psi
DN 80	3″	Up to 2,41 MPa / 24,1 bar / 350 psi
DN 100	4″	Up to 2,41 MPa / 24,1 bar / 350 psi
DN 125	5″	Up to 2,41 MPa / 24,1 bar / 350 psi
DN 150	6″	Up to 2,41 MPa / 24,1 bar / 350 psi
DN 200	8″	Up to 2,41 MPa / 24,1 bar / 350 psi
DN 250	10″	Up to 2,41 MPa / 24,1 bar / 350 psi
DN 300	12″	Up to 2,41 MPa / 24,1 bar / 350 psi

Pressure drop charts

Pressure loss - DN50:

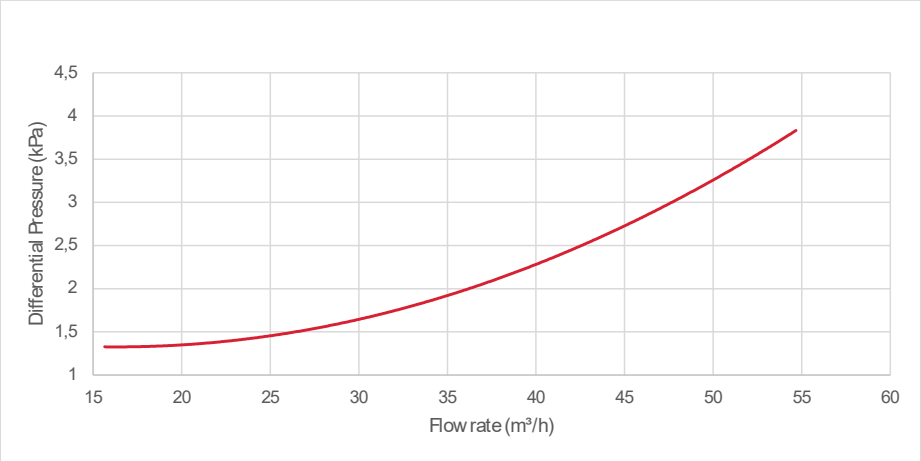

Pressure loss - DN65:

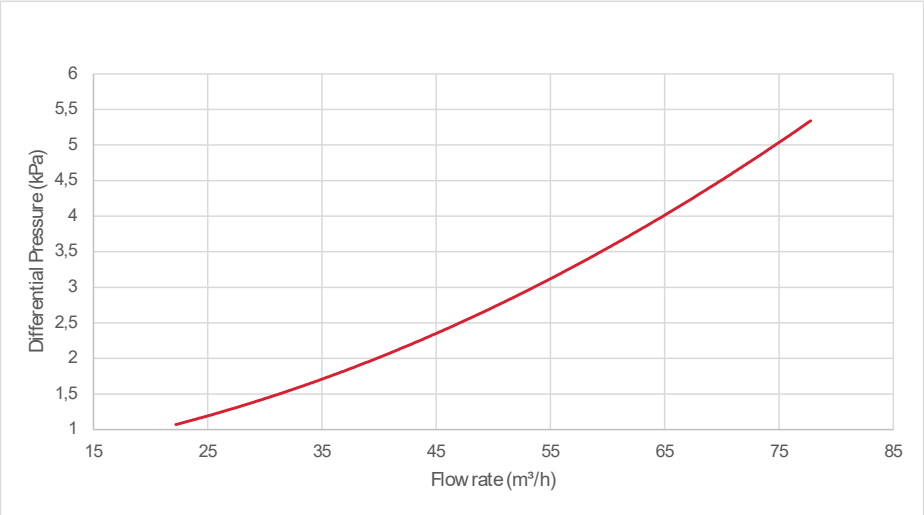

Pressure loss - DN80:

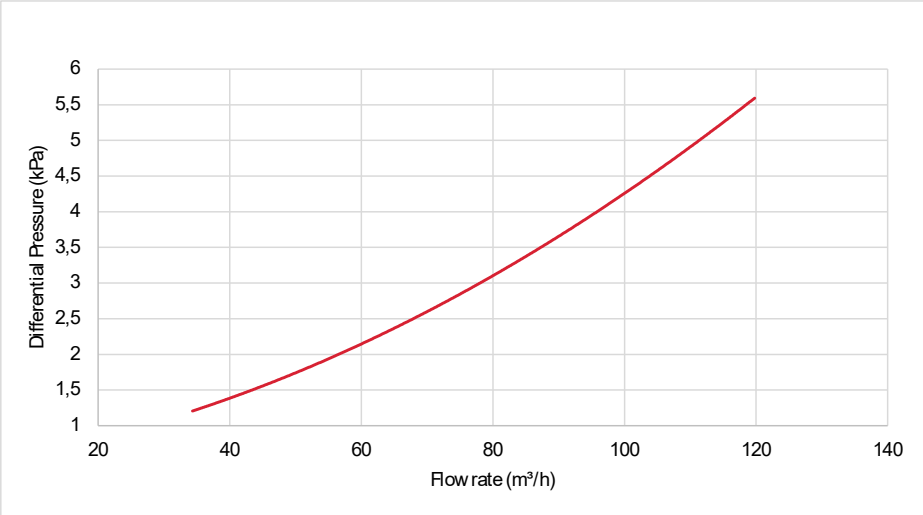

Pressure loss - DN100:

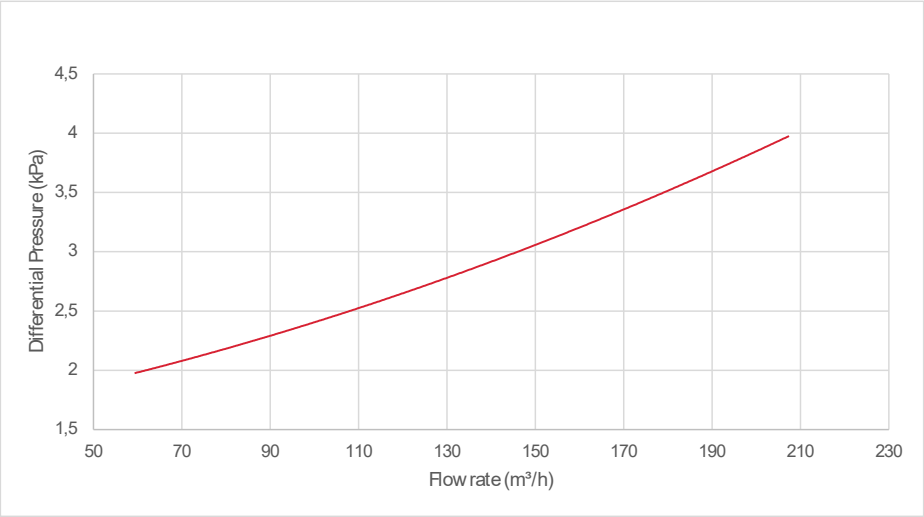

Pressure loss - DN125:

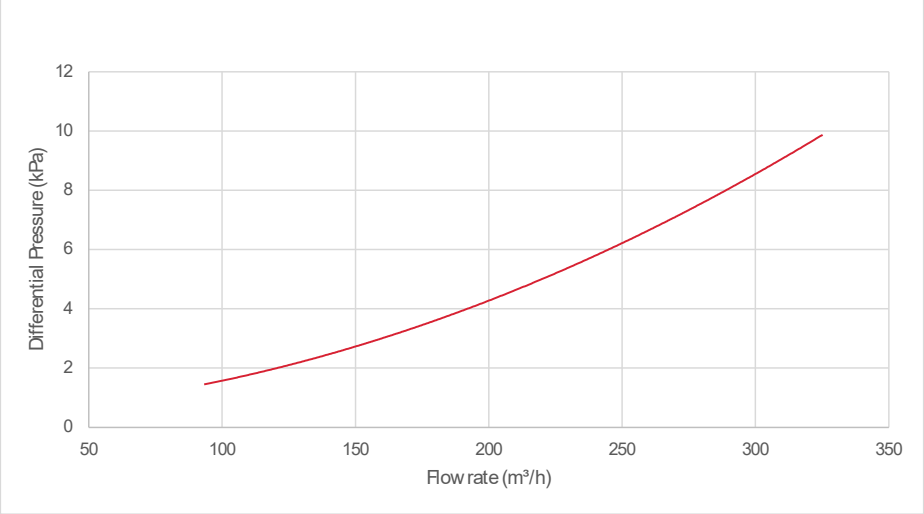

Pressure loss - DN150:

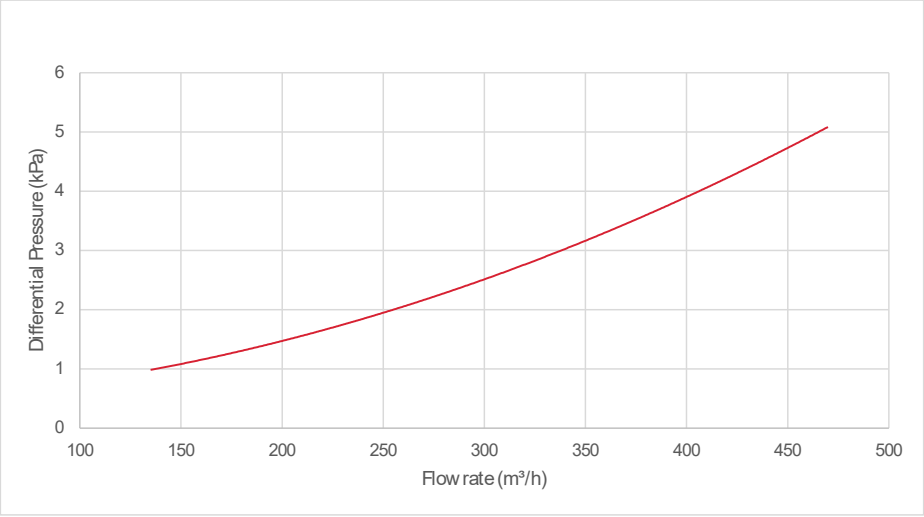

Pressure loss - DN200:

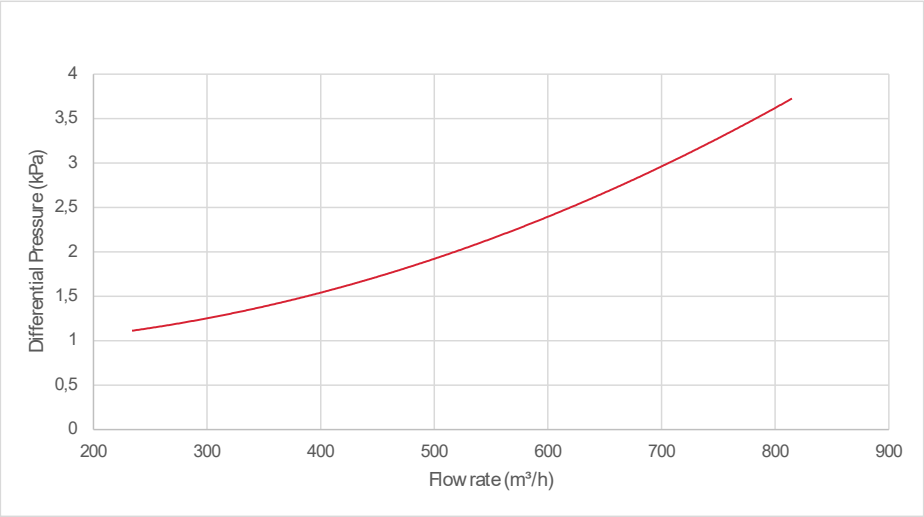

Pressure loss - DN250:

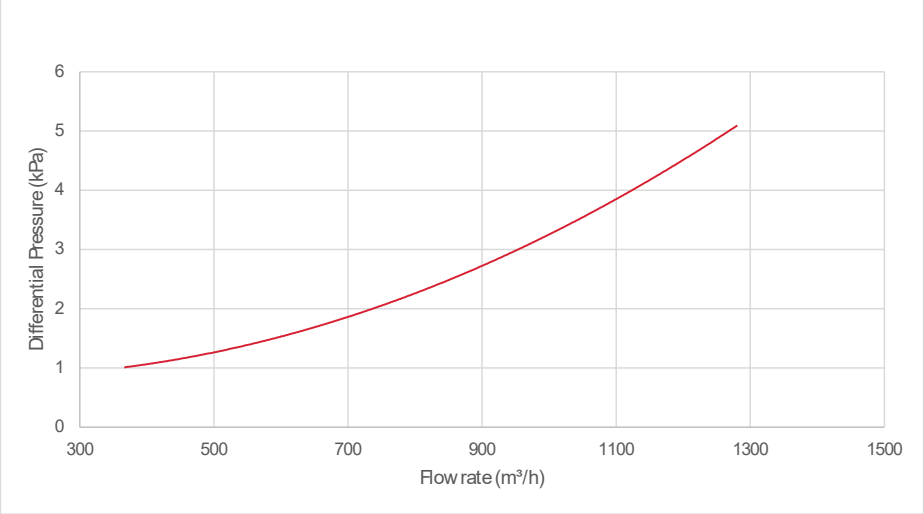

Pressure loss - DN300:

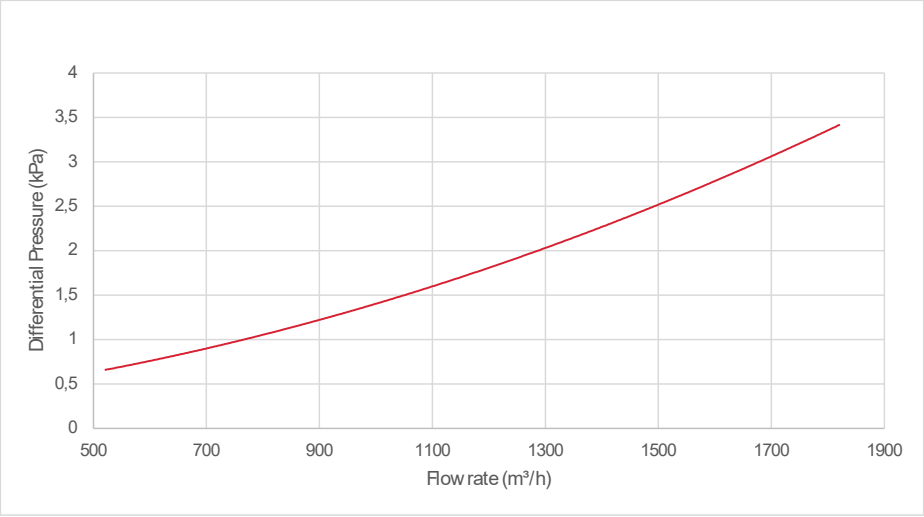

Storage and handling

- Upon receipt, carefully check complete the valve on any damage during shipment.
- Valves should unloaded carefully , they should not be lifted by using the waterway-passage through the valve. Heavy valves have an eye-bolt on top for lifting purposes. Do not drop the valve onto the ground.
- FCV valves must be stored indoor, protect the rubber seating from direct sunlight. When stored outside, protect the valve from weather conditions and avoid accumulation of water, dirt or debris.

Installation

- Inspection before installation. Checklist:
  1. Check pressure rating of the valve is compatible with the service conditions. FCV valves may be installed with any schedule or pressure class of pipe that is listed or approved.
  2. Check that the standard of the piping flanges on both sides are drilled according the same standard as the valve. Check that the facings of all flanges are free of dirt and / or mechanical damages.
  3. Check that the available length between the pipe-flanges matches the total length of the valve (+ 2x gasket-thickness).
  4. Verify that there are two gaskets available to install in between the flanges on both sides. Check the pressure / temperature rating of the gaskets.
  5. Check availability of correct bolts & nuts to complete both flange-connections.
  6. Check that the pipe-flanges are parallel.
  7. No need to lubricate the clapper-hinges or the rubber seating inside.
  8. Check that valve-body and adjacent pipes are clean inside and that the grooves are clean and free of dust / debris.
  9. Pipework must be supported near the valve and pipes (flanges) must be well aligned so that no extra stress will be exerted on the valve-body during installation.
  10. To prolong the valve-life, we recommend to install the valve not closer than 5-6 x DN when installed downstream near fittings (bends, tees, reducers, pumps etc…)
  11. The valves have a flow direction to be respected at installation. There is a clear flow direction arrow on the body. In vertical pipes the flow MUST always be upwards. In horizontal pipes please locate the cover on the top.
  12. For retrofit replacements or repair work: all pipes need to be depressurized and purged before starting the installation / repair.
  13. Personnel for the installation must be qualified for the task.

- Installation of the valve:
  1. Separate the 2 pipe-flanges and position the valve with the gaskets between the flanges.
  2. Relax the flanges and install all bolts and nuts handtight.
  3. Tighten now all bolts using the recommended torque value.
     For correct tightening please apply cross-over sequence.
     Bolt torque: please consult the gasket datasheet / supplier.

BOLT TORQUE SEQUENCE

(Bolt N°1 is the bolt closest to biggest gap between the 2 flanges)

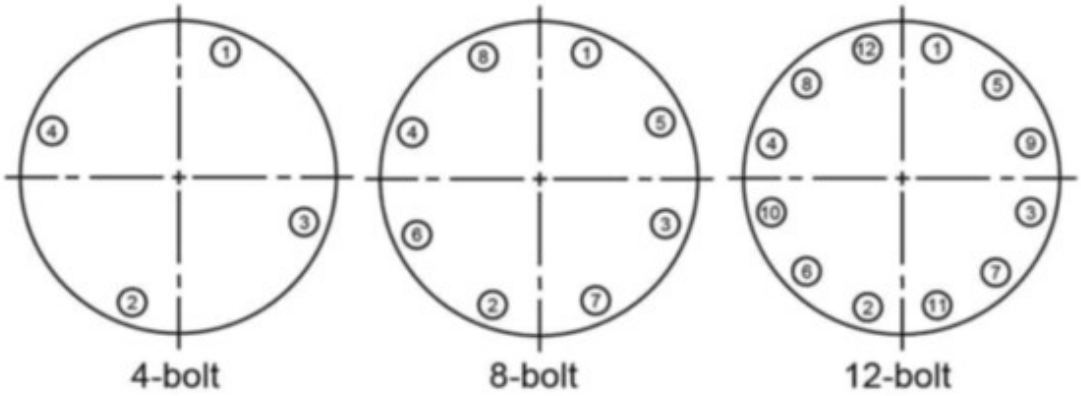

Our advice =

- STEP 1 = 30%
- STEP 2 = 60%
- STEP 3 = 100%

BOLT TORQUE = depends on gasket type used and bolt material grade.

Maintenance

MS-FCV

1. The valve should be at zero pressure.
2. Using a small, flat bladed screwdriver, remove the covers of the Bonnet Screws.
3. Loosen and remove the Bonnet bolts.
4. Remove the bonnet and disc assembly.
5. Replace the Bonnet Gasket.
6. Reinstall the bonnet and disc assembly.
7. Tighten Bonnet Bolts according to the table below.

Mounting torque of Bonnet Bolts

Valve size	Bolt size	Torque (Nm)
DN50 - 65	M8	20
DN80 - 100	M10	30
DN125 - 200	M12	50
DN250	M14	80
DN300	M16	110

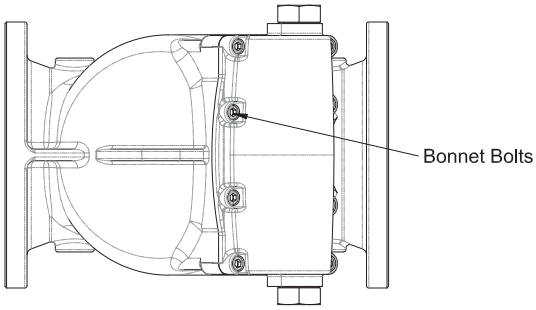

GENERAL INFO

- Installers should be trained or experienced to install and understand the product.
- Before installation, carefully check the product on any damage during shipment or handling.
- Read and understand all technical datasheets and installation instructions before attempting to install, remove or adjust any Profit products.
- Check if the pressure rating of the product is compatible with the service conditions.
- Depressurise and drain the sprinkler installation system before attempting to install, remove or adjust any Profit products.
- Never work on piping systems that are pressurised and / or filled with water or pressurised air.
- Piping Logistics reserves the right to change specifications, designs and / or standard equipment without notice and without incurring in any obligations.
- Use the necessary Personal Protection Equipment (PPE) to avoid personal injury (helmet, safety shoes, goggles and gloves).

Failure to follow these instructions could result in property damage, serious injury or death.

Our product must always be stored in closed and dry environments. Once installed on an above ground sprinkler system, they require no specific maintenance.

REVISION TABLE

Date	△	Notes
23/09/2026		Initial release.